Bernstein
Bernstein AG
Postfach 1164
D-32437 Porta Westfalica

Technical data sheet: Safety switch

Metal encapsulated, 2 x M20x1.5, Locked by magnetic force

Type:	SLM MVTW 24DC 55	Art.-No.:	6017119023	Date:

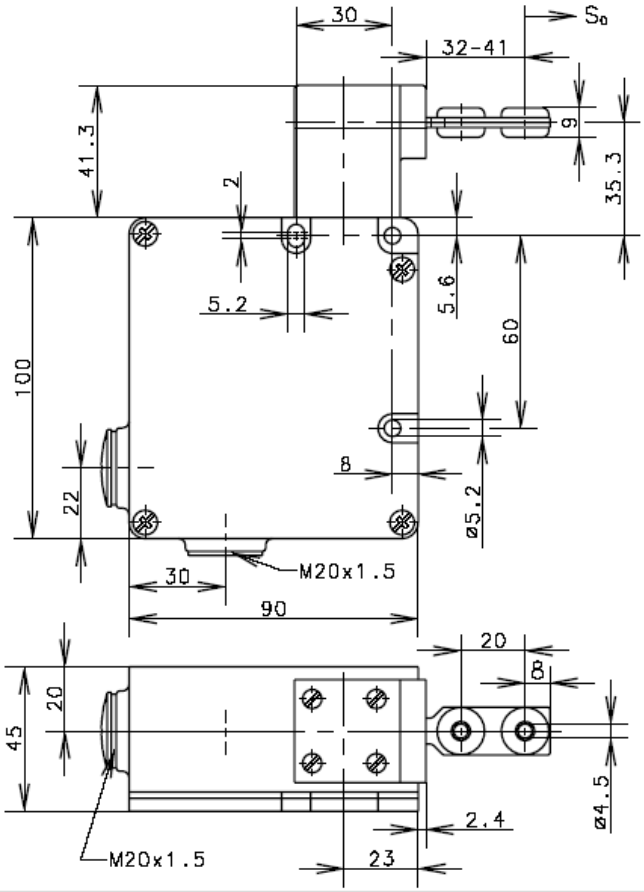

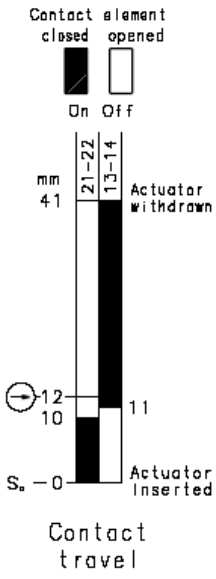

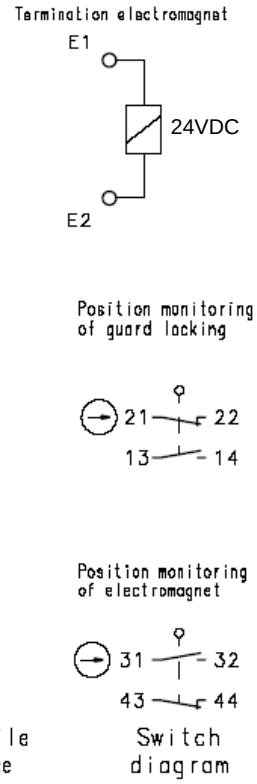

Contact operating force tolerance ±15%

Mechanical features:	Electrical features:	Approvals:
Enclosure: Al-GD	Contacts elements	BG
Cover: Al-sheet	Rated insulation voltage U_i: 250V	UL B300, R300
Actuating head: Al-GD	Utilisation categorie: AC 12 250 V/10 A	CSA B300, R300
Separated actuator: St/PA		
Ambient air temperature: -30°C up to +60°C	Utilisation categorie: AC 15 230 V/4 A	
Contact type: 2NC; 2NO (Zb)		Standards:
Switching principle: 4 slow make and break contact elements	Short circuit protection: DIAZED-safety implants Operating categorie gL/gG 10A TDz, 16A Dz	VDE 0660 T100, EN 60947-1
		VDE 0660 T200, EN 60947-5-1
Mechanical life: $1x10^6$ switch operations	Electromagnet:	IEC 60947-5-1
Actuating radius: $R_{min.}$= 400mm	Duty cycle: 100 % ED	GS-ET 19
Velocity for actuating: $V_{max.}$= 1.5m/s	Temperature class: B	
Mounting according DIN EN 50041 3 screws M5	Power consumption: P20 = 5.2W	Remarks:
	Operating voltage: 24VDC	The moving protection class (IP-Code) is valid only at closed cover and when using an at least equivalent cable gland.
Termination cross section: 1mm² flex.		
Terminals: 10 screws M3.5		
2 non-fused earthed conductor M4		
Cable entry size: 2 x M20x1.5	Safety instructions	
Weight: approx. 0.81 kg	• Do not use this safety switch as a mechanical end stop!	
Protection class (IP-Code): IP67 according to EN 60529; DIN VDE 0470 T1	• In case of power interruption the position of rest of the protection apparatus will not be remain. Protection against self-starting should be provided.	
Build in location: selectable	• Four approach directions for actuator are available.	
Locking principle: magnetic force	• Turning the actuator head (4x90°) only when the actuator is plugged in.	
Unlocking: spring force	• Pre-travel actuator (compensation of shock and vibrations) approx. 9mm.	
Locking force: 1000 N retaining force in locked position		

Schutzvermerk nach DIN 34 beachten
Copyright reserved